T R O V A T O

Specification Sheet

SABLE BENCH

Dimensions

1500W x 360D x 450Hmm
Weight: 20kg
Maximum recommended user weight: 110kg per seat position. 2 seater bench.

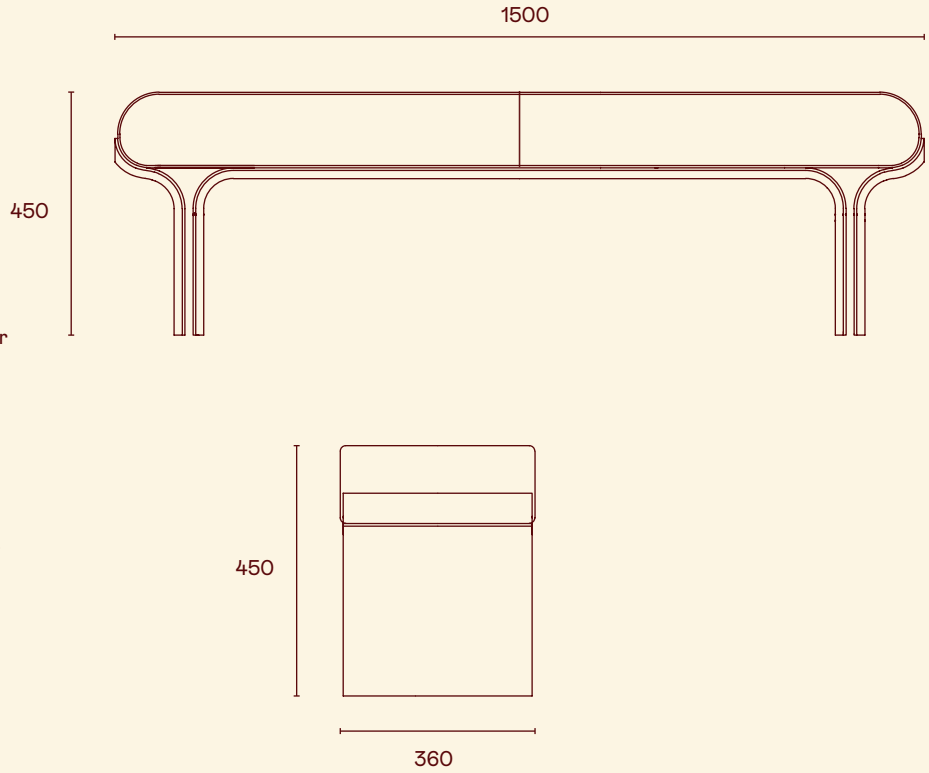

Material composition & construction

Frame: Engineered timber construction with multi-layer plywood core and natural timber veneer (American Ash or American Walnut), fully wrapped for a seamless finish.
Internal Structure: Reinforced with solid timber elements for enhanced strength and stability.
Finish: Clear polyurethane lacquer finish with 2H scratch resistance.
Seat: High-density polyurethane foam with fixed upholstery in premium Australian leather.
Base/Legs: Integrated leg structure in matching timber veneer finish.
Feet/Glides: Black adjustable feet with protective felt pads.

Available combinations

Walnut

Chestnut Leather

Ash

Nougat Leather

Leather technical information & composition

Leather:
Top grain leather, sourced from Australia. Lightly corrected and finished with a refined lychee emboss, creating a consistent surface with a subtle natural character. Upholstered in protected leather, finished with a surface coating to improve resistance to staining, abrasion and light exposure.
This treatment ensures colour consistency and durability suited to residential and light commercial environments.
Thickness: 1.2–1.4 mm
Abrasion Resistance: ASTM D7255-14, 500 rubs (1000g load)

Carton information

Number of Cartons: 1
Boxed Dimension: 1550 x 410 x 500mm | 27.5kg
No assembly required

Dimensions provided are approximate only and manufacturing tolerances apply
Finishes and colours are provided as a guide.

T R O V A T O

Specification Sheet

SABLE BENCH

Care & Maintenance

Timber:
Dust regularly with a soft, dry cloth. Clean with a damp cloth and mild soap solution, wiping in the direction of the grain. Avoid excessive moisture and harsh chemicals. Protect from direct sunlight and maintain a stable indoor environment to minimise movement or cracking.

Leather:
Dust regularly with a soft, dry cloth. Avoid the use of water, detergents or harsh cleaning agents. In the event of spills, blot immediately with a clean, dry cloth — do not rub. Keep away from direct sunlight and strong artificial light to minimise fading or discolouration. Avoid contact with abrasive materials, chemicals or coloured fabrics that may transfer. Apply a leather conditioner specifically formulated for aniline leather sparingly, and only when required. Natural variations, subtle markings and the development of a patina over time are inherent to genuine leather and contribute to its character.

Warranty

Warranty period is 24 months from date of purchase.

Warranty may be voided if improper cleaning or maintenance causes damage. Natural materials such as timber and leather contain inherent variations in colour, grain, texture and tone, these are natural characteristics and not considered defects. Sable bench is not suitable for outdoor use. General everyday wear & tear is not considered a defect and therefore will not be covered by Manufacturing Warranty.
Products specified for commercial or high-traffic environments are assessed on a project basis. Due to the varied nature of commercial use, standard residential warranty terms do not apply.

Country of Origin

Made in PRC